Diagram Remote Receiver with Sliding Board K-329

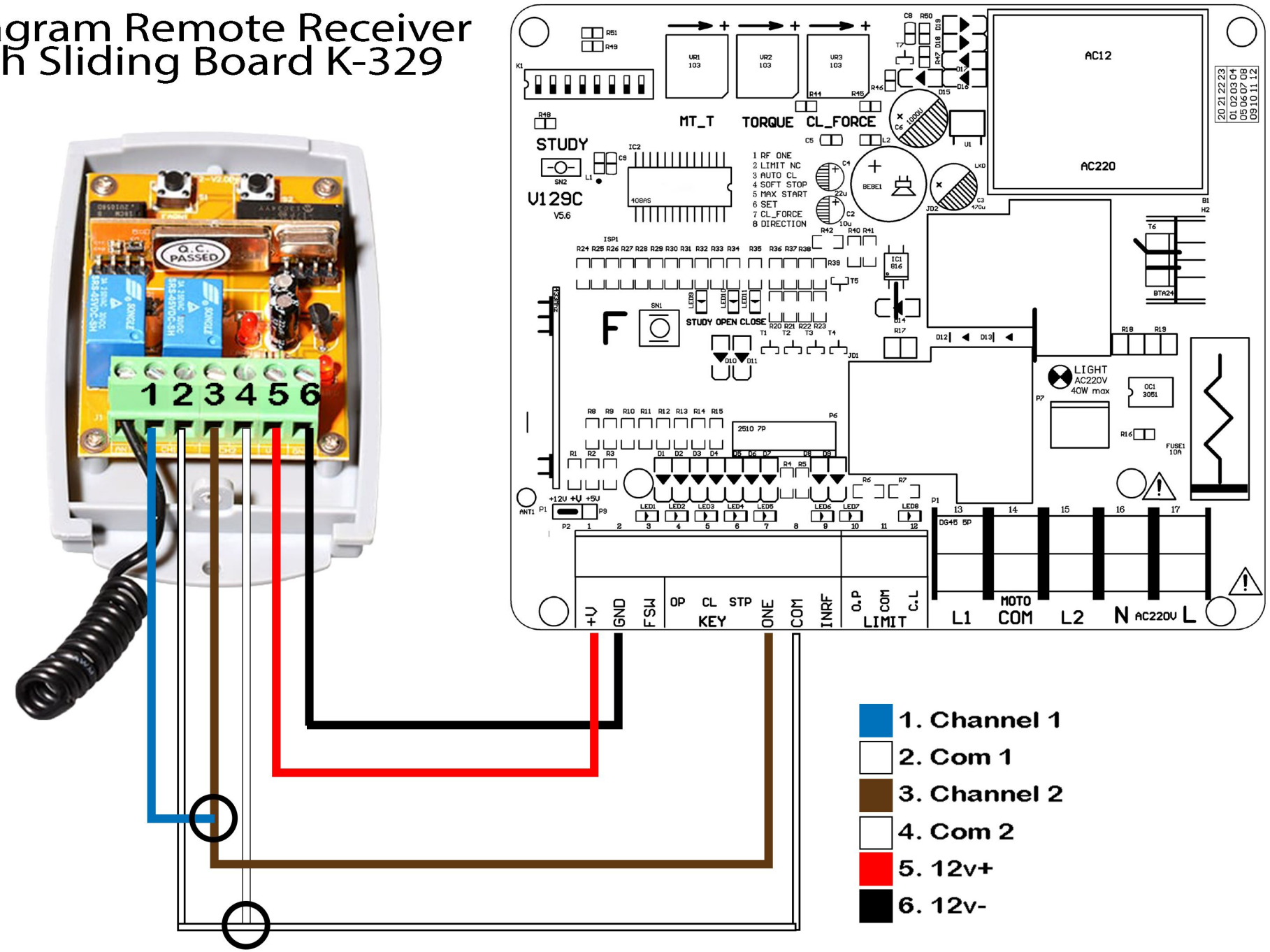

I. Product name: AC Sliding Gate Controller

II. Product model:V129 /K329E

III. Product function introduction:

In order to make installation and debugging become easier and easy to use, our company has developed an intelligent self-learning sliding gate controller. The controller uses imported micro-computer chips, digital control, powerful, high safety performance, easy to installation and debugging and many other features.

IV. Product characteristics

1. Switching on the power every time and the first operation, the gate will reach the limit position slowly, prevent rush out of the limit due to the inertia.
2. Anti-rush out stroke design: When the gate reach the stroke, can only press the opposite direction button, the motor can move to prevent rush out the stroke.

Note: There is a power-off retention function in place, and only reverse action after switching on the power.

3. High security: **V129E（V129E Hall）** has remote control function, sensitive, remote control, long distance, strong anti-interference, and use of the most advanced encoding and decoding technology, it has higher security and confidentiality compared to the traditional remote control used in the market (password number is 2^32group). The number of passwords can reach hundreds million groups and cannot be cracked.
4. Motor time protection: To prevent the motor from running for a long time when the stroke is out of order, the controller will learn the motor running time automatically without artificial setting.10 seconds more than the time in stroke.
5. Automatic closing function: time can be adjusted from 1 to 250 seconds.
6. Motor strength adjustment: can adjust operation strength of the motor.
7. Slow speed adjustment of motor: can adjust the thrust of motor at slow speed operation.
8. Resistance return function: can adjust the resistance through the potentiometer.

（Using special Hall components for stroke,no need to distinguish between upper limit and lower limit,as long as the motor motion and the stroke input light are the same color, the motor can be stopped in place.If the direction is opposite, just change the direction by dialing the dail code 8.）

V. Product parameters

1. Working power: AC 220V ± 10%,AC 110V ± 10%
2. Maximum output current: 10A
3. Fuse selection: AC220V 10A/AC110V 15A
4. Remote control distance: Open space > 30 meters
5. Operating temperature range: -25 degree - +75 degree; relative humidity: <60%, no condensation.

Dial code function

B1: Remote control single-button
B2:Limit nc
B3: Automatic closing function
B4: Slow function
B5: Maximum force start
B6: Function Setting
B7: Resistance return function
B8: Motor direction

I. Wiring diagram

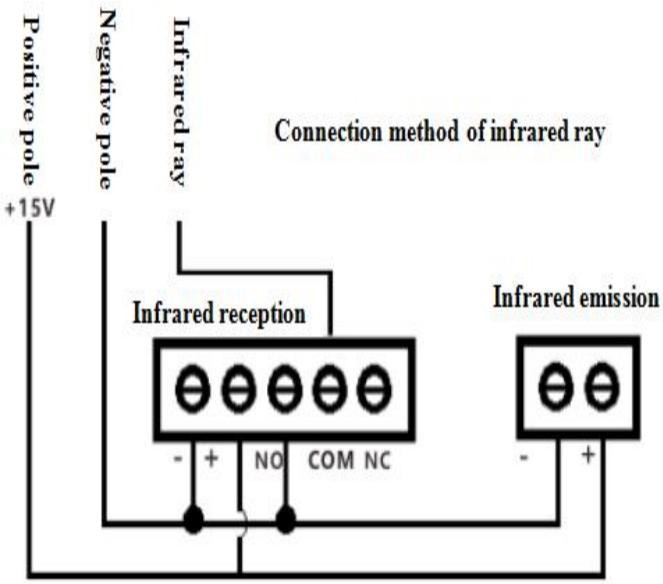

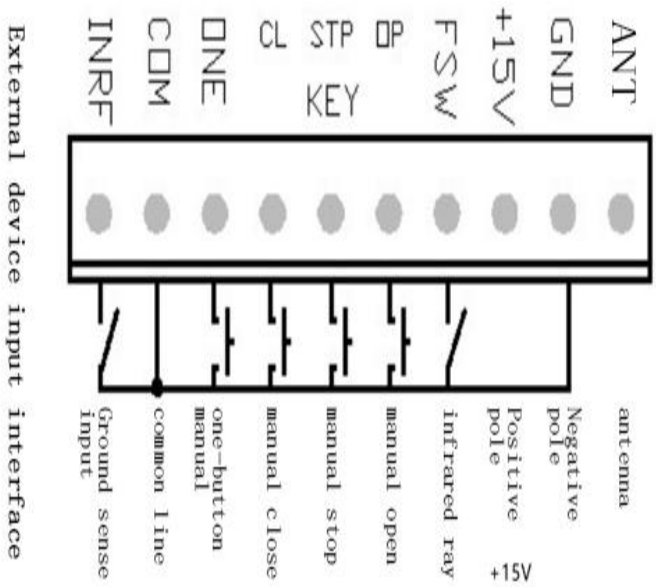

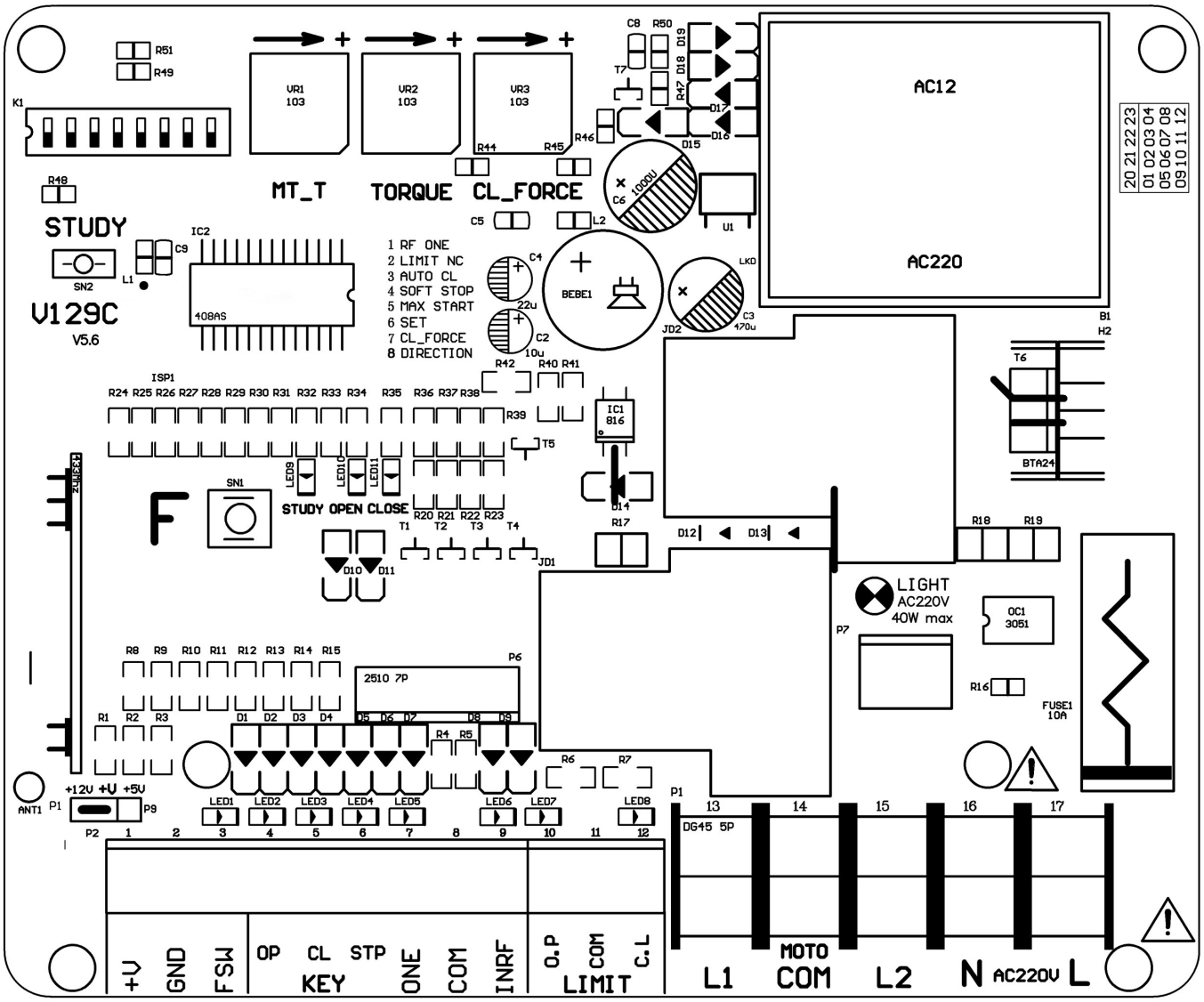

II. Equip code and erase code of remote control

1. Equip code

Press STUDY button for 2 seconds and release, then quickly press and hold any button on the remote control. Equip code is completed if you hear a tick. Large equip,repeat the operation. It can be equipped with up to 300 remote controllers.

2. Erase code

Press the STUDY button and hold on about 8 seconds, then release after you hear a tick, it complete the elimination of the matched transmitter.

3. Remote control single-button control

When **red dial code 1** is in the ON position, the remote control is in single-button cycle control mode, which is four-state cycle such as open, STOP, close , STOP.

4. Remote control four-button control

When **red dial code 1** is in the OFF position, remote control is in four-button control mode. That is open, close, STOP and lock.when the lock function is enabled,press the stop button to unclock.

III. Choice of function

1. Remote control single-button control B1

When **dial red code 1** is in the ON position, the remote control is in single-button cycle control mode, when on the OFF position,remote control is in four-button control mode.

2. Limit NC **B 2**

3. Automatic closing function B3

When **red dial code 3** is in the ON position, turn on automatic closing function. When the gate is open to the limit position, gate start counting the closing time.

Time setting: Only dial code 3 and dial code 6 are in the ON position at the same time. Press F , press once to represent 1 second. After setting, dial the dial code 6 to the OFF position. dial code 3 remains unchanged.

4. Slow function B4

When **red code 4** is in the ON position, turn on the slow stop function. This function is automatic learning and judgment, no need to set manually. When the gate is switching on the power, to operate the remote control in the normal way, the gate will reach the limit position slowly, then press the reverse button on the remote control, the gate will go fast then slow to the limit position, then press the remote control to go back and forth 2 times,the setting is completed if you hear a tick, it is best not to have stopped operating in the setup process.

Note: In the slow stop process, if the thrust of motor is not enough, the slow stop speed thrust potentiometer (MT) can be adjusted to adjust the strength.The slow stop position of the gate is fixed about 20 cm.

5. Maximum force start function B5

When **red dial code 5** is in the ON position, turn on maximum force start function. When the gate is heavy, and soft start does not work. Dial the dial code 5 to the ON position and make the gate to start, but this will increase the start noise of the gate.

6. Function setting B6

When **red dial code 6** is in the ON position**,** it can set for automatic closing time, etc. After the setting is completed, it must be turn to OFF.

7. Resistance ruturn function B7

When **red dial code 7** is in the ON position, turn on resistance return function.

Optimal function adjustment method: When the gate can open and close normally, turn on the function, perform the gate closing action, adjust the resistance potentiometer (FORCE) during the gate closing process at counterclockwise, make the gate to stop and return automatically, this time is a critical point that the gate meet resistance and return, you can add a point at clockwise as critical point of meet resistance. If you found that this setting is still strong during actual measurement,adjust the TORQUE properly at counterclockwise, make the gate meet resistance become appropriate.

8. Motor direction B8

In the case of the gate running direction correspond to the limit position.when the gate is not in the limit position (When the door stops in the middle position) and it has no action, it is only necessary to dial the dial code 8 to change motor direction and travel direction .

IV. Ground sense function

The ground sense input has three states:
1. When closing the gate, if there is a ground sense signal input, the gate will reverse to the gate-open position, then delay 2 seconds to perform the gate closing action.
2. When opening the gate, if there is a ground sense signal input, the gate continue to open, after the gate is open to the limit position, delay 2 seconds to perform gate closing action.
3. When the gate is open to the stroke position, 2 seconds after a ground sense signal input, the gate perform closing action.

V. Use of infrared

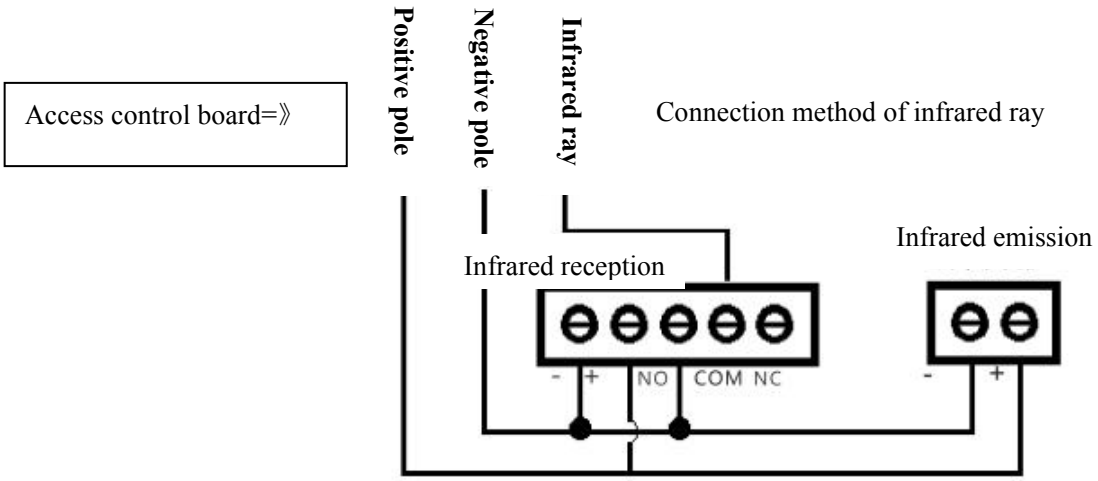

When the gate perform closing action, the infrared FSW is blocked, the gate stop and then bounce back to the open position to prevent pinching.

VI. Optional accessories

1. Alarm lamp: gate opener can connected to DC/ AC-24V/265V alarm lamp.
2. Emergency stop switch: When gate opener is in motion, press the switch, the gate will stop immediately.
3. Manual switch.

VII. Common faults and troubleshooting

Fault phenomenon	Analyze the reasons	Handling method
Circuit board does not respond	1. Whether the socket is power on.	1. Check with the electrician
Press the remote control gate did not respond	1. Remote controller does not equip code 2. Remote control battery has no electricity 3. Whether the emergency stop input is disconnected	1. Please refer to the second point for re- equip code 2. To replace the same type of battery 3. To check the input device, light is on if it is correct
Remote control is too close	1. Use time of battery is too long 2. Same frequency signal interference	1. To replace the same type of new battery 2. Can only wait for interference to disappear
Gate cannot be closed automatically	Automatic closing function is not set	Please refer to automatic gate closing setting